www.liraland.com

LIRA-SAPR

Modern software package for analysis and design of building and mechanical engineering structures of different purposes

Certificate of Compliance with building codes of the Russian Federation № РОСС RU.СП15.Н00615
Copyright Certificate No.38885 for LIRA-SAPR software from June 25, 2011
Copyright Certificate No.41580 for MIRAGE software from December 29, 2011
Validation passport for the software ПС No.193 issued by Federal Environmental, Industrial and Nuclear Supervision Service of Russia

Modern concepts of computer-aided analysis and design
Multi-language support: Ukrainian, Russian, English, French

Main features

- New advanced graphical user interface SAPFIR-Structures;
- User-friendly graphical interface (VISOR-SAPR module) where it is possible to visualize design model in 3D graphics at all stages of analysis;
- Alternative Ribbon User Interface;
- Powerful multifunctional solver that realizes advanced algorithms of setting up and solving the set of equations up to several millions of unknowns;
- Mode for alternative design: within the same problem the user could vary element sections, materials, building codes;
- Extensive library of finite elements that enables you to create computer models of almost any structures;
- Dynamic analysis of the structure (earthquake, wind with pulsation, vibration, impulse, impact, response spectrum, earthquake by accelerograms). For earthquake analysis, building codes of different foreign countries are supported;
- Modules for design of reinforced concrete (RC) and steel elements in accordance with building codes of CIS, Europe and the USA;
- Super-element simulation with visualization at every stage of analysis. This simulation allows you to remove any restrictions on the size of the problem;
- Modules of physical nonlinearity on the basis of different nonlinear relations. These modules enable you to simulate the loading process for both mono- and bi-material RC structures and to trace crack propagation, creep strain and yield until the complete damage of the structure;
- Modules of geometrical nonlinearity that enable you to analyse both geometrically stable structures (flexible plate, shells, trusses, etc.) and geometrically unstable structures that take load due to considerable change in its initial shape (separate ropes, guy trusses, guy shells, tent structures, membranes);
- Special Document Maker that enables you to generate report that contains data in text, tabular and graphical form and generate files for MS Office;
- Interface with other graphic and documentary systems (SAPFIR-3D, Revit Structure 2008/2009/2010, AutoCAD, ArchiCAD, Advance Steel, BoCAD, Allplan, STARK ES, Gmsh, MS Word, MS Excel, GLAZER, etc.) through a DXF, MDB, STP, SLI, MSH, STL, OBJ, IFC and other files;

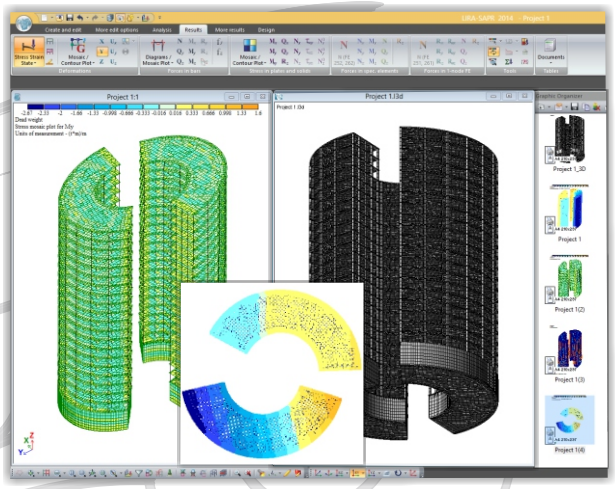

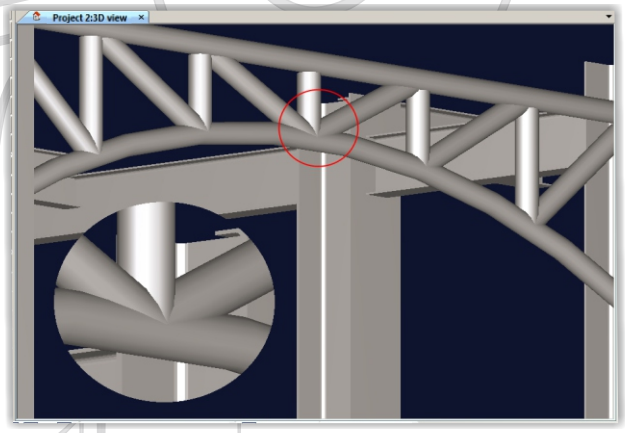

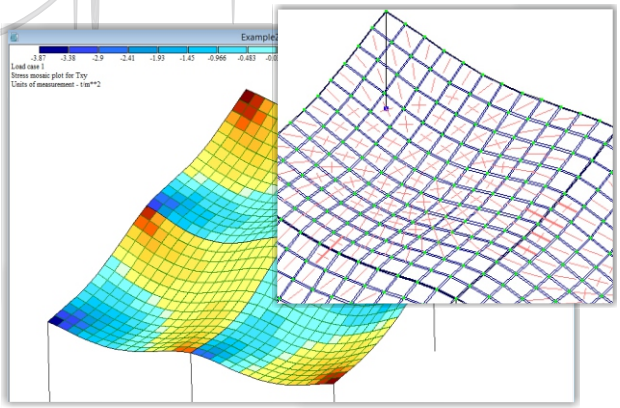

Preprocessor SAPFIR-Structures

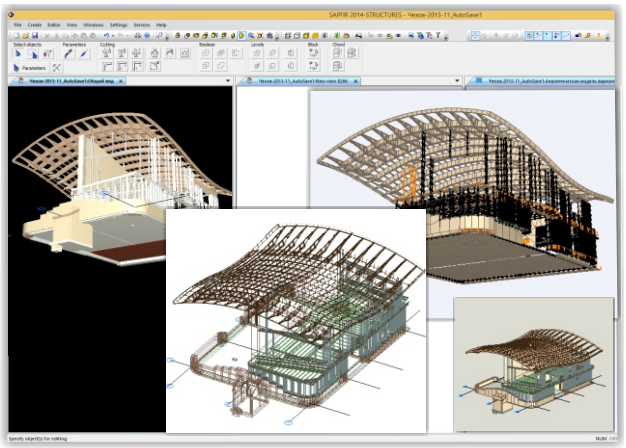

SAPFIR-Structures module enables you to generate design model of the structure based on 3D model obtained in SAPFIR-3D, Allplan, Revit, AutoCAD, etc.
The following sequence of transformation steps is realized: architectural model – analythical model – design model. Different algorithms for FE mesh generation. Automatic generation of rigid bodies for arbitrary intersection of bars and plates. User-firendly mode for defining capital, slab thickening, ramp, sequence of assemblage with further visualization of assemblage (erection) process.

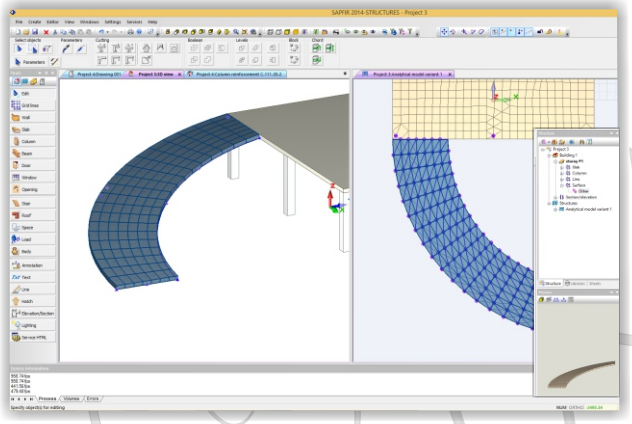

SAPFIR-Structures module enables the user to define and edit loads concentrated and distributed along the line and across the area. Loads are defined on arbitrary surfaces; loads are not located relative to FE model. To define wind load, only wind region and direction of load are required.
It is possible to automatically generate service loads depending on the purpose of the premises. Diagnostics of generated analytical model is available.

Key Features and Options

– to select triangulation algorithm and individual settings for parameters. Different algorithms for FE mesh generation. For every algorithm it is possible to define its own specific parameters that describe specific procedures of the algorithm and properties of result.
– to manually extend and intersect contours to join their nodes.
SAPFIR-Structures module enables you to search for intersected or neighbouring plates and bars, find intersection of such elements with the specified precision and edit places where they are connected.
– multicriterion quality control for the model; interactive report with errors.

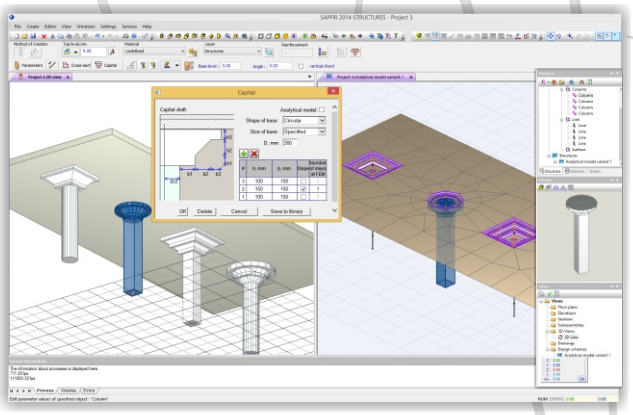

Library of verification algorithms helps the user to detect inconsistencies and potential problems in analythical model of the object. Errors are presented in the interactive list, so you could easily find problems at the graphic presentation of the model.
– to define and edit loads graphically in the interactive mode, generate load cases.
With appropriate graphical tools, the engineer will be able to simulate loads in the space of the object more clearly.
– to generate several analytical models (design options) from the same physical model.
For each design option, you could devote attention to a certain structural aspect. As a result, this aspect may be considered in the most effective way.

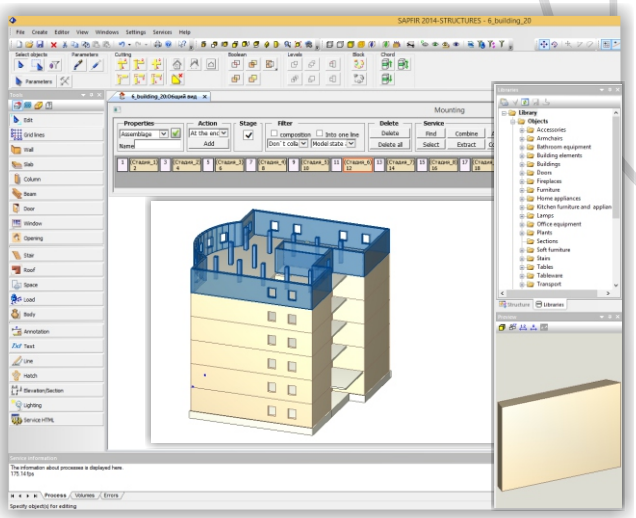

Constant development, comprehensive support

Main modes and modules

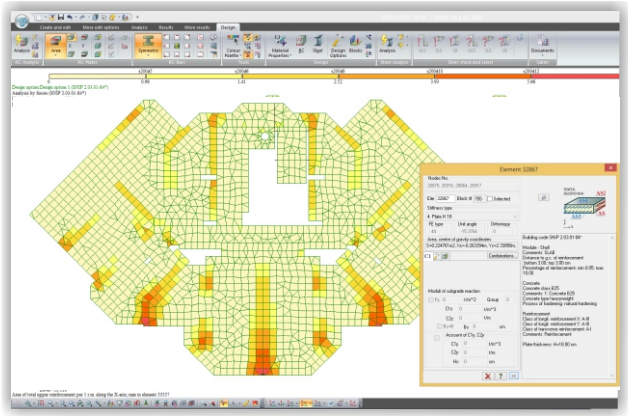

Reinforced Concrete (RC) Structures (mode)

Analysis & design of RC structures. In this mode it is possible to determine areas of reinforcement for columns, beams, slabs and shells according to ultimate and serviceability limit states. Drawing of beams and columns are presented after analysis; they may be saved as DXF files. Eurocode and other building codes are supported.

LARM-SAPR module. Separate RC Bar or Plate Elements

Analysis of reinforcement in local mode - analysis & design of the separate RC bar or plate element according to appropriate building codes. Areas of reinforcement are determined and then the specified reinforcement is checked for selected element. Eurocode and other building codes are supported.

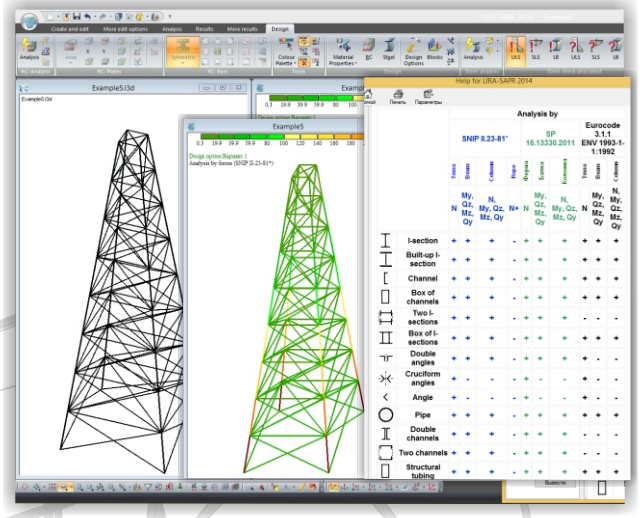

Steel Structures (mode)

Analysis & design of elements of steel structures. In this mode you could determine and check sections, consider joints of steel structures. STC-SAPR module (steel analysis in local mode) works in stand-alone mode and checks several variants of design. Eurocode and other building codes are supported.

SRS-SAPR module. Steel Tables (Steel Rolled Shapes)

In this module you could create new and edit existing steel tables of rolled and welded sections. Extensive database of steel tables and shapes of CIS, Europe and the USA.

SB-SAPR module. (Section of Bar)

In this module you could create custom shapes and compute their axial, flexural, torsion, shear and plastic section properties.

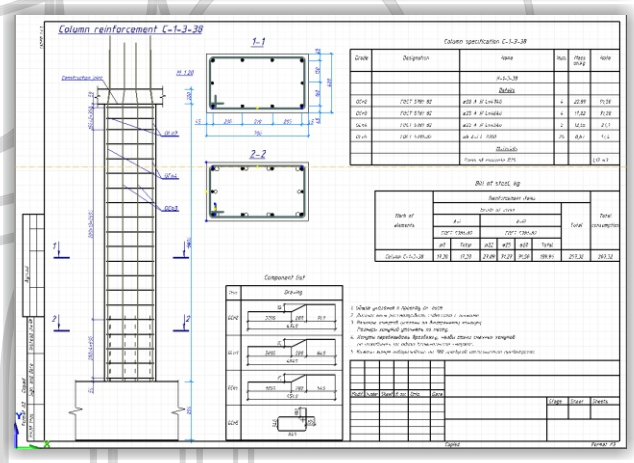

SAPFIR-RC

There are three modules: SLAB, DIAPHRAGM, COLUMN.

These modules present reinforcement & formwork drawings for floor slabs, diaphragms, columns; the drawings contain reinforcement patterns, specifications, bills of materials and components. The drawings are presented for model of the structure generated in SAPFIR-Structures module and based on values of design areas of reinforcement obtained in ARM-SAPR mode.

In SLAB module the user could generate contour plots of design reinforcement; obtain user-friendly tools to define, locate and unify pattern zones for additional reinforcement with account of defined main reinforcement for every mark of a slab. It is also possible to frame the openings with reinforcement, etc. Drawings may be generated along each of the two directions of rebar patterns along top and botton edges of a slab.

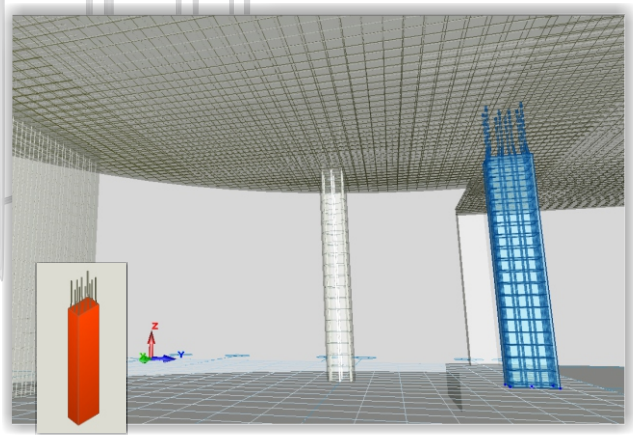

In DIAPHRAGM module the user could generate contour plots of design reinforcement for defined marks of diaphragms (walls). For design of diaphragm, rebars are arranged automatically along two directions for both edges of diaphragm. Rebar pattern generated automatically may be modified by the user later. It is also possible to frame the openings with reinforcement, etc.

According to mosaic plots of design reinforcement on the model of whole structure, in COLUMN module you could obtain tools to generate required types of reinforcement for defined marks of columns. Column reinforcement is arranged automatically according to assigned type of reinforcement. Rebar pattern generated automatically may be modified by the user later.

Additional special solvers and graphic modules

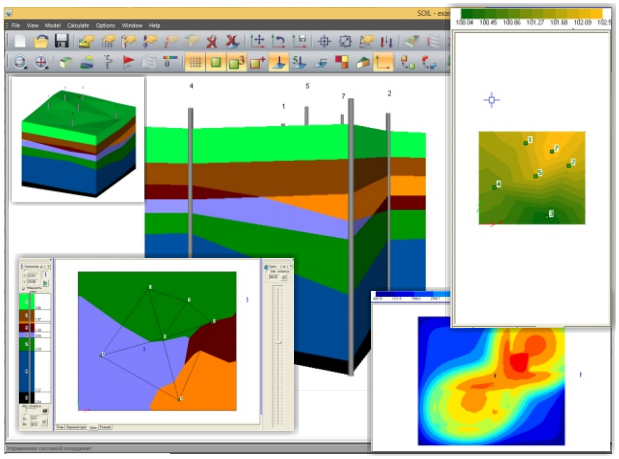

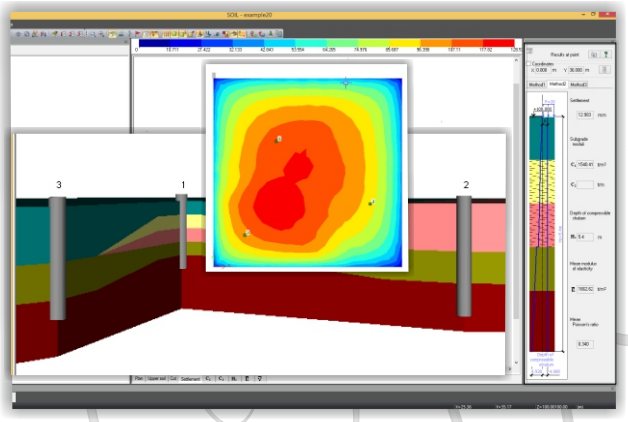

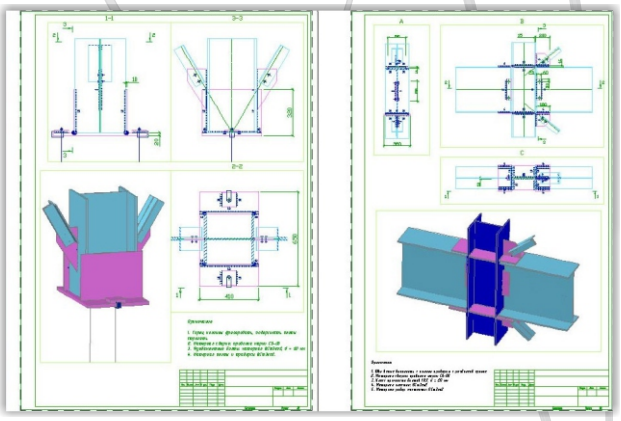

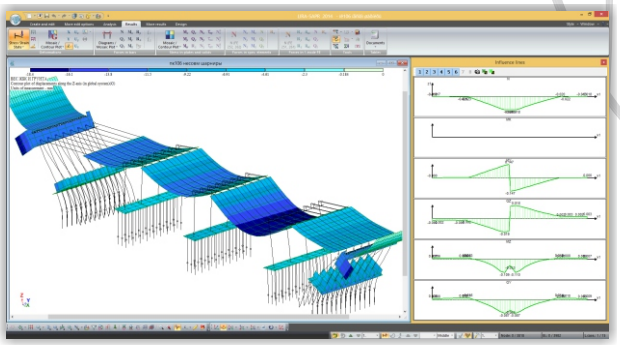

Multicore processor technology

- Special solver **ASSEMBLAGE plus** that allows you to simulate erection (assemblage) of the multi-storey buildings with account of frequent changes in design model. For monolithic reinforced concrete structures it is allowed to disassemble formwork, temporary supports, change stiffness and strength of concrete due to temporary freezing of concrete mix and other factors.
- **SOIL** system enables you to generate 3D soil model according to data from geological survey (location and soil properties in the specified boreholes). It is also possible to compute moduli of subgrade reaction that vary across the area of foundation slab. Neightbouring structures are considered. Subgrade moduli may be calculated by different methods.

  There is special procedure that enables you to perform automatic triangulation of 3D soil, apply obtained FE mesh to 3D soil model and assign physical and mechanical properties to every FE depending on its location. Contour plots for parameters of stress strain state on arbitrary plane sections of soil simplify evaluation of analysis results.
- **KM-SAPR** module, based on analysis of steel structures in LIRA-SAPR software, enables you to obtain layouts with marks of elements and nodes, lists of elements, drawings of joints with 3D visualization and specifications. That is, you will get complete set of KM drawings (drawings of steel structures) in AutoCAD environment.
- **METEOR** (Method of unified complete result). *Enhanced options for **MODEL VARIATION** system.* New system that enables the user to merge problems with the same topology – nodal coordinates, FE model, geometry of sections. Problems may differ in load cases, stiffness and boundary conditions.
- **BRIDGE** solver is mentioned to analyse bridge structures and enables you to get influence and surface lines of forces in specified section from moving load. Based on obtained forces the user could compose design combinations of forces, import them to SB-SAPR module and determine stresses in elements of sections in the framework of steel bridges.
- **Dynamics-plus** solver enables you to perform time history analysis of nonlinear deformed structures (physical, geometrical and structural nonlinearity). Analysis on arbitrary loads as well as analysis by accelerograms is available.

Address: 7a Kiyanovsky side street (pereulok), Kiev 04053, Ukraine
Website: www.liraland.com / E-mail: international@liraland.com.ua